UNIVERSITY OF CAMBRIDGE INTERNATIONAL EXAMINATIONS
General Certificate of Education
Advanced Subsidiary Level
and Advanced Level

PHYSICS

Paper 2 AS Structured Questions

9702/02

October/November 2006

1 hour

Candidates answer on the Question Paper.
No Additional Materials are required.

Candidate Name

Centre Number

Candidate Number

READ THESE INSTRUCTIONS FIRST

Write your Centre number, candidate number and name on all the work you hand in.
Write in dark blue or black pen.
You may use a soft pencil for any diagrams, graphs or rough working.
Do not use staples, paper clips, highlighters, glue or correction fluid.

Answer **all** questions.
You may lose marks if you do not show your working or if you do not use appropriate units.

At the end of the examination, fasten all your work securely together.
The number of marks is given in brackets [ ] at the end of each question or part question.

DO NOT WRITE IN THE BARCODE.

DO NOT WRITE IN THE GREY AREAS BETWEEN THE PAGES.

For Examiner's Use	
1	
2	
3	
4	
5	
6	
7	
Total	

This document consists of **14** printed pages and **2** blank pages.

© UCLES 2006

Data

speed of light in free space,	$c = 3.00 \times 10^{8}\ \text{m s}^{-1}$
permeability of free space,	$\mu_0 = 4\pi \times 10^{-7}\ \text{H m}^{-1}$
permittivity of free space,	$\epsilon_0 = 8.85 \times 10^{-12}\ \text{F m}^{-1}$
elementary charge,	$e = 1.60 \times 10^{-19}\ \text{C}$
the Planck constant,	$h = 6.63 \times 10^{-34}\ \text{J s}$
unified atomic mass constant,	$u = 1.66 \times 10^{-27}\ \text{kg}$
rest mass of electron,	$m_e = 9.11 \times 10^{-31}\ \text{kg}$
rest mass of proton,	$m_p = 1.67 \times 10^{-27}\ \text{kg}$
molar gas constant,	$R = 8.31\ \text{J K}^{-1}\ \text{mol}^{-1}$
the Avogadro constant,	$N_A = 6.02 \times 10^{23}\ \text{mol}^{-1}$
the Boltzmann constant,	$k = 1.38 \times 10^{-23}\ \text{J K}^{-1}$
gravitational constant,	$G = 6.67 \times 10^{-11}\ \text{N m}^2\ \text{kg}^{-2}$
acceleration of free fall,	$g = 9.81\ \text{m s}^{-2}$

© UCLES 2006

Formulae

uniformly accelerated motion, $s = ut + \frac{1}{2}at^2$
$v^2 = u^2 + 2as$

work done on/by a gas, $W = p\Delta V$

gravitational potential, $\phi = -\frac{Gm}{r}$

simple harmonic motion, $a = -\omega^2 x$

velocity of particle in s.h.m., $v = v_0 \cos \omega t$
$v = \pm \omega \sqrt{(x_0^2 - x^2)}$

resistors in series, $R = R_1 + R_2 + \ldots$

resistors in parallel, $1/R = 1/R_1 + 1/R_2 + \ldots$

electric potential, $V = \frac{Q}{4\pi\epsilon_0 r}$

capacitors in series, $1/C = 1/C_1 + 1/C_2 + \ldots$

capacitors in parallel, $C = C_1 + C_2 + \ldots$

energy of charged capacitor, $W = \frac{1}{2}QV$

alternating current/voltage, $x = x_0 \sin \omega t$

hydrostatic pressure, $p = \rho g h$

pressure of an ideal gas, $p = \frac{1}{3}\frac{Nm}{V}\langle c^2 \rangle$

radioactive decay, $x = x_0 \exp(-\lambda t)$

decay constant, $\lambda = \frac{0.693}{t_{\frac{1}{2}}}$

critical density of matter in the Universe, $\rho_0 = \frac{3H_0^2}{8\pi G}$

equation of continuity, $Av = \text{constant}$

Bernoulli equation (simplified), $p_1 + \frac{1}{2}\rho v_1^2 = p_2 + \frac{1}{2}\rho v_2^2$

Stokes' law, $F = Ar\eta v$

Reynolds' number, $R_e = \frac{\rho v r}{\eta}$

drag force in turbulent flow, $F = Br^2\rho v^2$

© UCLES 2006

[Turn over

Answer **all** the questions in the spaces provided.

1 **(a)** Define what is meant by

(i) *work done*,

.....

.....

..... [2]

(ii) *power*.

.....

..... [1]

(b) A force F is acting on a body that is moving with velocity v in the direction of the force.

Derive an expression relating the power P dissipated by the force to F and v.

[2]

(c) A car of mass 1900 kg accelerates from rest to a speed of 27 m s^{-1} in 8.1 s.

(i) Calculate the average rate at which kinetic energy is supplied to the car during the acceleration.

rate = ... W [2]

© UCLES 2006

(ii) The car engine provides power at a constant rate. Suggest and explain why the acceleration of the car is **not** constant.

.....

.....

..... [2]

2 A student investigates the speed of a trolley as it rolls down a slope, as illustrated in Fig. 2.1.

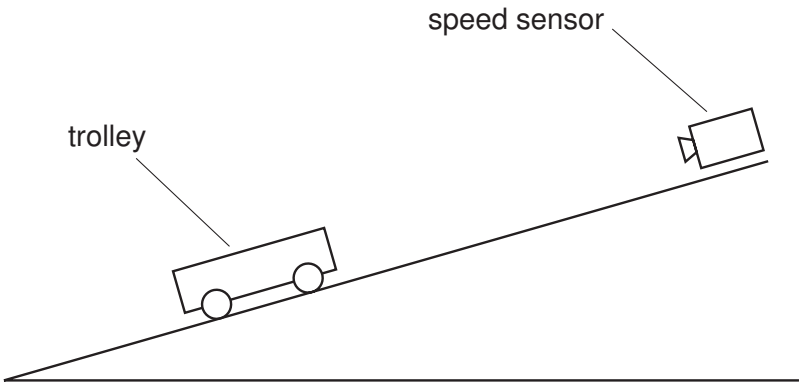

Fig. 2.1

The speed v of the trolley is measured using a speed sensor for different values of the time t that the trolley has moved from rest down the slope.

Fig. 2.2 shows the variation with t of v.

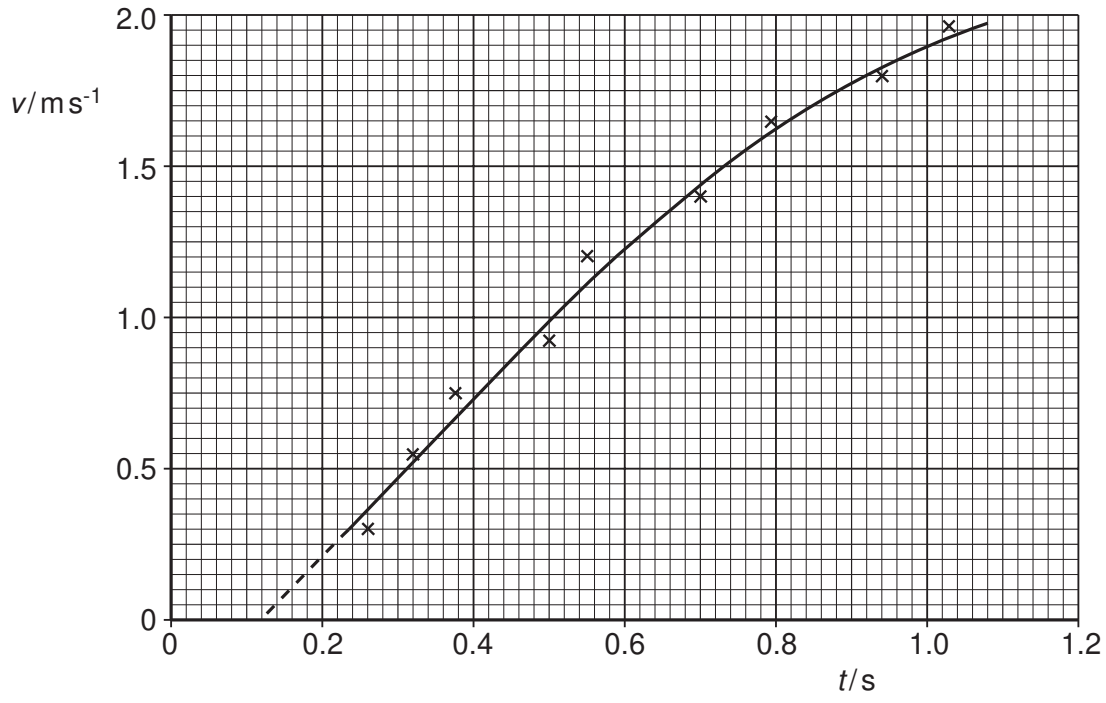

Fig. 2.2

(a) Use Fig. 2.2 to determine the acceleration of the trolley at the point on the graph where $t = 0.80$ s.

acceleration = ... $m\,s^{-2}$ [4]

(b) **(i)** State whether the acceleration is increasing or decreasing for values of t greater than 0.6 s. Justify your answer by reference to Fig. 2.2.

.....

.....

..... [2]

(ii) Suggest an explanation for this change in acceleration.

.....

..... [1]

(c) Name the feature of Fig. 2.2 that indicates the presence of

(i) random error,

.....

..... [1]

(ii) systematic error.

.....

..... [1]

© UCLES 2006

3 Francium-208 is radioactive and emits α-particles with a kinetic energy of 1.07×10^{-12} J to form nuclei of astatine, as illustrated in Fig. 3.1.

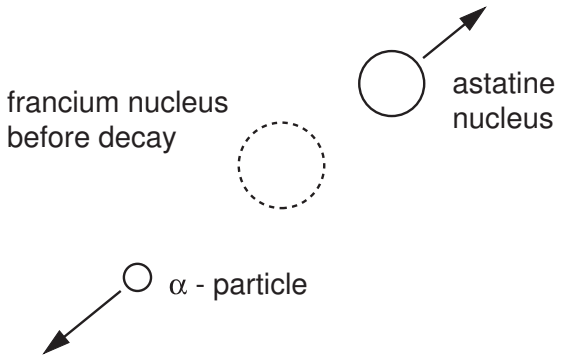

Fig. 3.1

(a) State the nature of an α-particle.

.....

..... [1]

(b) Show that the initial speed of an α-particle after the decay of a francium nucleus is approximately 1.8×10^{7} m s^{-1}.

[2]

(c) **(i)** State the principle of conservation of linear momentum.

.....

.....

..... [2]

(ii) The Francium-208 nucleus is stationary before the decay. Estimate the speed of the astatine nucleus immediately after the decay.

speed = ... $m\,s^{-1}$ [3]

(d) Close examination of the decay of the francium nucleus indicates that the astatine nucleus and the α-particle are not ejected exactly in opposite directions.

Suggest an explanation for this observation.

.....

.....

..... [2]

4 **(a)** In order that interference between waves from two sources may be observed, the waves must be coherent.

Explain what is meant by

(i) *interference*,

.....

.....

..... [2]

(ii) *coherence*.

.....

..... [1]

(b) Red light of wavelength 644 nm is incident normally on a diffraction grating having 550 lines per millimetre, as illustrated in Fig. 4.1.

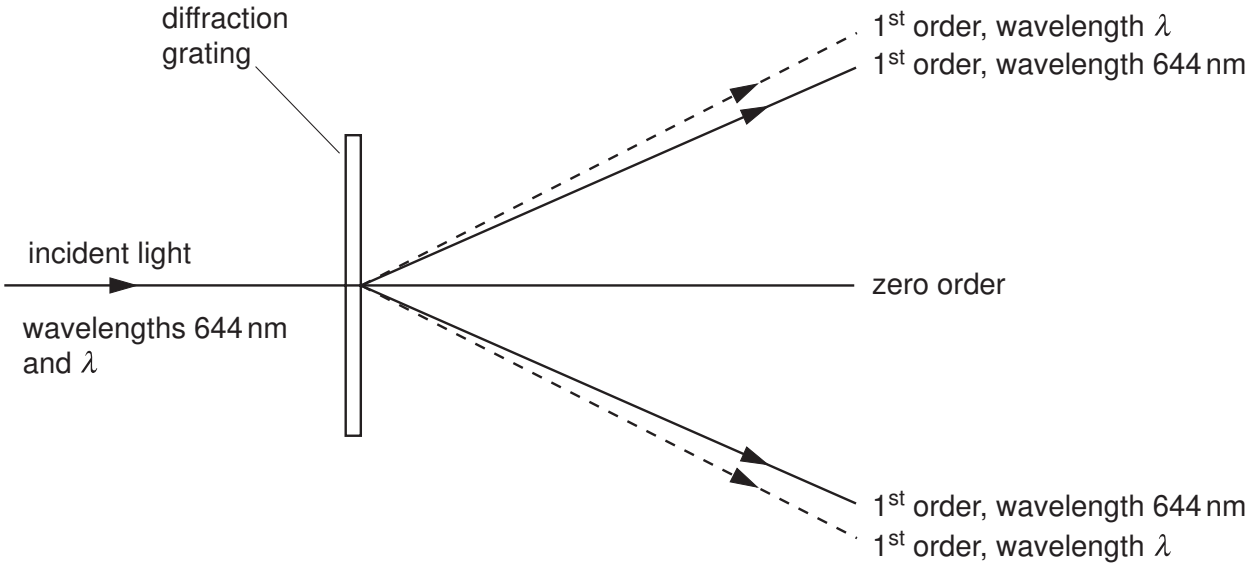

Fig. 4.1

Red light of wavelength λ is also incident normally on the grating. The first order diffracted light of both wavelengths is illustrated in Fig. 4.1.

(i) Calculate the number of orders of diffracted light of wavelength 644 nm that are visible on each side of the zero order.

number = ... [4]

(ii) State and explain

1. whether λ is greater or smaller than 644 nm,

.....

..... [1]

2. in which order of diffracted light there is the greatest separation of the two wavelengths.

.....

.....

..... [2]

.

5 **(a)** Distinguish between the structure of a metal and of a polymer.

metal: .....

.....

.....

polymer: .....

.....

..... [4]

(b) Latex is a natural form of rubber. It is a polymeric material.

(i) Describe the properties of a sample of latex.

.....

.....

..... [2]

(ii) The process of heating latex with a small amount of sulphur creates cross-links between molecules. Natural latex has very few cross-links between its molecules.

Suggest how this process changes the properties of latex.

.....

.....

..... [2]

© UCLES 2006

6 A straight wire of unstretched length L has an electrical resistance R. When it is stretched by a force F, the wire extends by an amount ΔL and the resistance increases by ΔR. The area of cross-section A of the wire may be assumed to remain constant.

(a) (i) State the relation between R, L, A and the resistivity ρ of the material of the wire.

.....

..... [1]

(ii) Show that the fractional change in resistance $\frac{\Delta R}{R}$ is equal to the strain in the wire.

[2]

(b) A steel wire has area of cross-section $1.20 \times 10^{-7}\,\text{m}^2$ and a resistance of $4.17\,\Omega$.

The Young modulus of steel is $2.10 \times 10^{11}\,\text{Pa}$.

The tension in the wire is increased from zero to 72.0 N. The wire obeys Hooke's law at these values of tension.

Determine the strain in the wire and hence its change in resistance. Express your answer to an appropriate number of significant figures.

change = ... Ω [5]

© UCLES 2006

7 **(a)** Distinguish between the electromotive force (e.m.f.) of a cell and the potential difference (p.d.) across a resistor.

.....

.....

.....

..... [3]

(b) Fig. 7.1. is an electrical circuit containing two cells of e.m.f. E_1 and E_2.

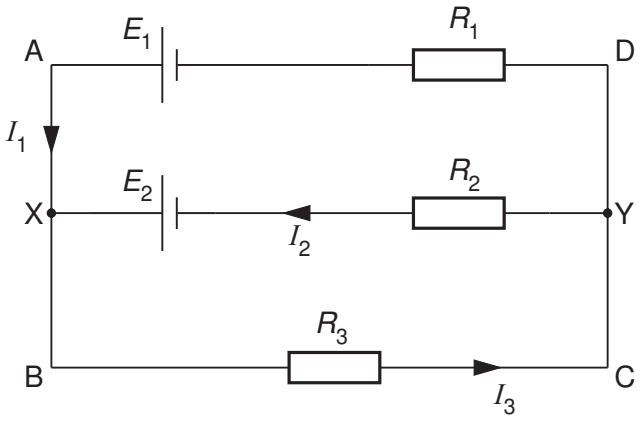

Fig. 7.1

The cells are connected to resistors of resistance R_1, R_2 and R_3 and the currents in the branches of the circuit are I_1, I_2 and I_3, as shown.

(i) Use Kirchhoff's first law to write down an expression relating I_1, I_2 and I_3.

..... [1]

(ii) Use Kirchhoff's second law to write down an expression relating

1. E_2, R_2, R_3, I_2 and I_3 in the loop XBCYX,

..... [1]

2. E_1, E_2, R_1, R_2, I_1 and I_2 in the loop AXYDA.

..... [1]

© UCLES 2006

BLANK PAGE

BLANK PAGE

Permission to reproduce items where third-party owned material protected by copyright is included has been sought and cleared where possible. Every reasonable effort has been made by the publisher (UCLES) to trace copyright holders, but if any items requiring clearance have unwittingly been included, the publisher will be pleased to make amends at the earliest possible opportunity.

University of Cambridge International Examinations is part of the University of Cambridge Local Examinations Syndicate (UCLES), which is itself a department of the University of Cambridge.